TEAR SHEET

Piatto Medium Pendant

Item # TOB 5115HAB-AI-EU

Designer: Thomas O'Brien

Height: 17.1cm
Width: 45.7cm
Canopy: 11.4cm Round
Finishes: HAB, PN
Shade Treatments: AI, PW
Socket: E27 Keyless
Wattage: 15 LED A
IP Rating: IP20 Class I

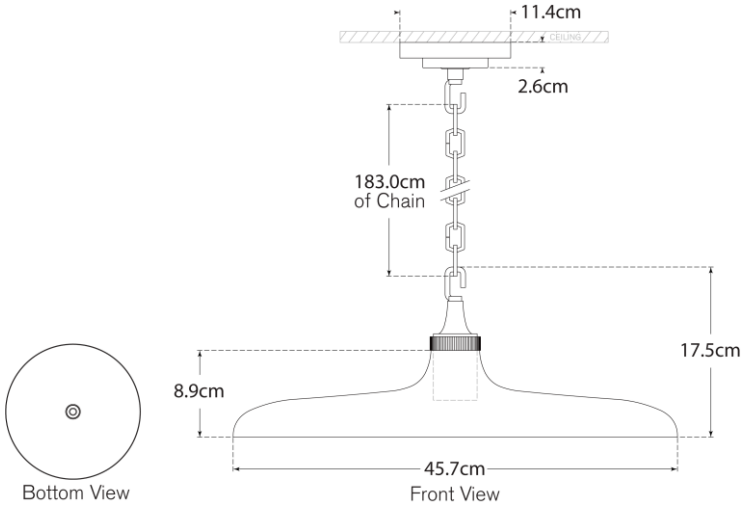

VC GALLERY MILAN

CB CE LED