TEAR SHEET

Westbury Chandelier

Item # RL 5181NB-L-EU

Designer: Ralph Lauren

Height: 78.7cm

Width: 76.8cm

Canopy: 16.5cm Round

Finishes: NB, PN

Shade Treatments: L

Shade Details: 7.6cm x 15.2cm x 12.7cm

Socket: 8 - E14 Candelabra

Wattage: 8 - 40 B

IP Rating: IP20 Class I

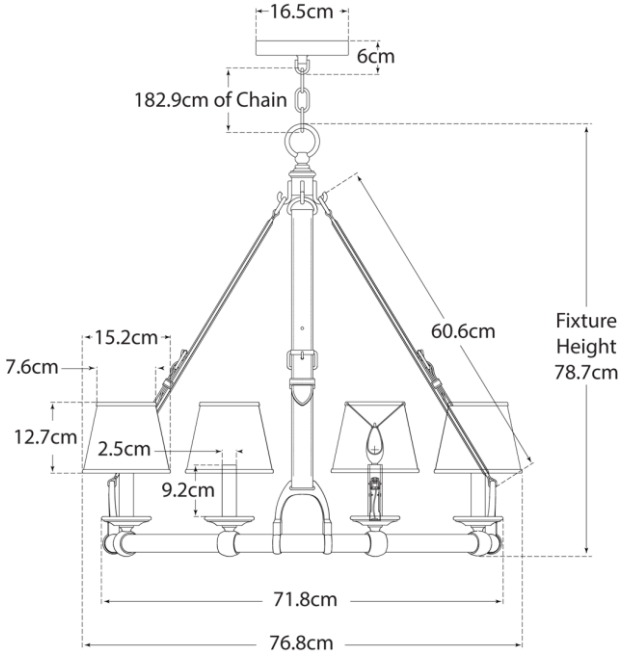

VC GALLERY MILAN

CB CE